SONOMA SCIENTIFIC, INC.

COAXIAL ISOLATORS, CIRCULATORS
EDGE GUIDED MODE ISOLATORS

Sonoma Scientific, the CUSTOM DESIGN MICROWAVE FERRITE HOUSE offers a broad line of isolators and circulators and companion products. Items shown in this data sheet are representative of the products Sonoma Scientific has already designed and manufactured. Our professional engineering staff, with over 50 years of accumulated ferrite design experience, is available to assist you. If you have a question, contact Sonoma Scientific by phone, FAX or letter. Please see other data sheets for waveguide designs, microstrip capability, "drop in" isolators or circulators with tabs, integrated packages which may include waveguide to coax adaptors, filters, directional couplers, power monitor probes, etc.

Sonoma Scientific has the following capability.

- Frequency coverage 40 MHz to 40 GHz
- Designs to 4 KW CW or more
- 120% bandwidth (two octaves) or more
- Phase matching
- RFI specification to 100 dbc or more
- Low intermodulation products
- Military temperature ranges and environments
- MILI 45208 Quality Assurance
- Acceleration specifications to 40,000 G
- Standard and special connectors or cables
- Multi junctions
- Miniaturized
- High volume production capability
- Competitive prices

For quality and quantity call Sonoma Scientific.

2236 Suite A Park Place, Minden, NV 89423 Phone: 775-783-9100 Fax: 775-783-9098
E-mail: circulators@sonomascientific.com Website: www.sonomascientific.com

昆山同凯电子有限公司

SONOMA SCIENTIFIC, INC.

HIGH POWER CIRCULATORS FOR BROADCAST APPLICATIONS

LOW LOSS
HIGH POWER

FREQUENCY (GHz)	MODEL NUMBER	MINIMUM ISOLATION (DB)	MAXIMUM INSERTION LOSS(DB)	MAXIMUM VSWR	RATED POWER (WATTS)	OPERATING TEMPERATURE RANGE (°C)	SIZE LxWxH (IN.)
210-216	CX1H2	20	0.5	1.25	700	0 TO+50	6x4x1
470-596	CX4A1	20	0.5	1.25	1000	0 TO+50	3x3x1
470-600	CX4A2	20	0.4	1.25	1000	0 TO+50	3x3x1
494-502	CX4A3	20	0.4	1.25	1000	0 TO+50	3x3x1
542-550	CX5A1	20	0.4	1.25	1000	0 TO+50	3x3x1
558-566	CX5A1	20	0.4	1.25	1000	0 TO+50	3x3x1
566-576	CX5A1	20	0.4	1.25	1000	0 TO+50	3x3x1
574-582	CX5A1	20	0.4	1.25	1000	0 TO+50	3x3x1
582-590	CX5A1	20	0.4	1.25	1000	0 TO+50	3x3x1
620-628	CX5A1	20	0.4	1.25	1000	0 TO+50	3x3x1
630-638	CX6H1	20	0.4	1.25	1000	0 TO+50	3x3x1
630-710	CX5A1	20	0.4	1.25	1000	0 TO+50	3x3x1
646-654	CX5A1	20	0.4	1.25	1000	0 TO+50	3x3x1
654-662	CX5A1	20	0.4	1.25	1000	0 TO+50	3x3x1
686-694	CX5A1	20	0.4	1.25	1000	0 TO+50	3x3x1
702-710	CX5A1	20	0.4	1.25	1000	0 TO+50	3x3x1
718-726	CX5A1	20	0.4	1.25	1000	0 TO+50	3x3x1
728-734	CX5A1	20	0.4	1.25	1000	0 TO+50	3x3x1
734-742	CX5A1	20	0.4	1.25	1000	0 TO+50	3x3x1
750-758	CX5H1	20	0.4	1.25	1000	0 TO+50	3x3x1
788-794	CX5A1	20	0.4	1.25	1000	0 TO+50	3x3x1
794-800	CX5A1	20	0.4	1.25	1000	0 TO+50	3x3x1

1. *UNITS ARE AVAILABLE WITH ANY 6 OR 8 MHz BANDWIDTHS FROM 174 TO 806 MHz*
2. *UNITS ARE AVAILABLE WITH TYPE (N) OR (SC) CONNECTORS (CONSULT FACTORY).*
3. *HIGHER AVERAGE POWER LEVELS ARE AVAILABLE ON SPECIAL ORDER.*

昆山同凯电子有限公司

2236 Suite A Park Place, Minden, NV 89423 Phone: 775-783-9100 Fax: 775-783-9098
E-mail: circulators@sonomascientific.com Website: www.sonomascientific.com

SONOMA SCIENTIFIC, INC.

WAVEGUIDE ISOLATORS/CIRCULATORS

HIGH ISOLATION
LOW LOSS

FREQUENCY (GHZ)	WAVEGUIDE TYPE	MODEL NUMBER	MINIMUM ISOLATION (DB)	MAXIMUM INSERTION LOSS (DB)	VSWR MAX	RATED POWER WATTS	OPERATING TEMPERATURE RANGE(°C)	SIZE LXWxH (IN.)
10.20-10.80	WR75	WT10A1	20	0.30	1.25	1	-20 TO +70	1.75 X 2.75 X 1.50
10.96-11.70	WR75	WT10B1	20	0.30	1.25	1	-20 TO +70	1.75 X 2.75 X 1.50
11.46-11.96	WR75	WT11D3	20	0.30	1.25	1	-20 TO +70	1.75 X 2.75 X 1.50
11.70-12.20	WR75	WT11D4	20	0.30	1.25	1	-20 TO +70	1.75 X 2.75 X 1.50
12.25-12.75	WR75	WT12C3	20	0.30	1.25	1	-20 TO +70	1.75 X 2.75 X 1.50
12.70-13.30	WR75	WT12D2	20	0.30	1.25	1	-20 TO +70	1.75 X 2.75 X 1.50
17.70-19.70	WR42	WT17A3	20	0.30	1.25	1	-20 TO +70	1.0 X 1.49 X .89
21.20-23.60	WR42	WT21C4	20	0.30	1.25	1	-20 TO +70	1.0 X 1.49 X .89
21.20-22.60	WR42	WT21C13	20	0.30	1.25	1	-20 TO +70	1.0 X 1.49 X .89
22.20-23.60	WR42	WT21C14	20	0.30	1.25	1	-20 TO +70	1.0 X 1.49 X .89
24.50-25.50	WR42	WT24C1	20	0.30	1.25	1	-20 TO +70	1.0 X 1.49 X .89
25.50-26.50	WR42	WT24C2	20	0.30	1.25	1	-20 TO +70	1.0 X 1.49 X .89
26.50-27.50	WR28	WT26A4	20	0.30	1.25	1	-20 TO +70	.75 X 1.40 X .75
27.50-28.50	WR28	WT27C2	20	0.30	1.25	1	-20 TO +70	.75 X 1.40 X .75
28.50-29.50	WR28	WT28A1	20	0.30	1.25	1	-20 TO +70	.75 X 1.40 X .75
31.00-31.80	WR28	WT31A3	20	0.30	1.25	1	-20 TO +70	.75 X 1.40 X .75

1. *MOST UNITS ARE AVAILABLE AS CIRCULATORS.*
2. *HIGHER POWER LEVELS ARE AVAILABLE.*
3. *OTHER FREQUENCIES ARE AVAILABLE.*
4. *UNITS CAN BE SUPPLIED WITH METRIC THREADS.*

昆山同凯电子有限公司

2236 Suite A Park Place, Minden, NV 89423 Phone: 775-783-9100 Fax: 775-783-9098
E-mail: circulators@sonomascientific.com Website: www.sonomascientific.com

SONOMA SCIENTIFIC, INC.

MICROWAVE RADIO ISOLATORS/CIRCULATORS

LOW INSERTION LOSS
SURFACE MOUNT UNITS
CONNECTORIZED UNITS
POWER MONITOR PORTS
SPECIAL DESIGNS AVAILABLE

FREQUENCY (GHz)	MODEL NUMBER	MINIMUM ISOLATION (DB)	MAXIMUM INSERTION LOSS (DB)	MAXIMUM VSWR	RATED POWER (WATTS)	OPERATING TEMPERATURE RANGE (°C)	SIZE LxWxH (IN.)
.917-.960	TX9P1[2]	20	0.40	1.25	10	-20 TO +70	1.6 X 1.7 X .45
.928-.960	TX9N1[1]	20	0.40	1.25	10	-20 TO +70	1.0 X 1.3 X .35
1.70-1.85	C1ZV1[3]	28	0.40	1.15	10	-30 TO +60	1.25X1.25X1.0
1.85-2.10	C1ZV2[3]	28	0.40	1.15	10	-30 TO +60	1.25X1.25X1.0
1.90-2.10	T1ZT1[1]	18	0.30	1.30	1	-20 TO +70	1.0 X 1.0 X .54
1.90-2.10	T2YP1[2]	22	0.30	1.20	10	-40 TO +85	1.0 X 1.0 X .45
1.90-2.10	T1ZT2[1]	18	0.30	1.30	1	-20 TO +70	1.0 X 1.0 X .54
2.10-2.30	T2YP2[2]	22	0.30	1.20	10	-40 TO +85	1.0 X 1.0 X .45
2.10-2.30	T2YE1[2]	18	0.30	1.30	1	-20 TO +70	1.0 X 1.0 X .54
2.10-2.30	T2YL2[2]	18	0.30	1.30	1	-20 TO +70	1.0 X 1.0 X .54
2.40-2.50	T2YJ1[1]	20	0.50	1.25	1	-10 TO +70	.75 X .75 X .25
2.40-2.50	C2YR2[4]	23	0.40	1.25	1	-10 TO +70	1.25 X 1.25 X 1.0
3.60-4.20	T3ZH1[1]	20	0.40	1.25	5	-30 TO +80	.75 X .75 X .25
3.60-4.20	T3ZD1[2]	20	0.40	1.25	2	-20 TO +70	.75 X .75 X .50
3.60-4.20	C3ZE1[4]	22	0.40	1.17	2	-20 TO +70	1.25 X 1.25 X 1.0
5.70-5.85	T5YQ1[2]	20	0.40	1.25	2	-20 TO +70	.75 X .75 X .50
5.70-5.90	C5YW1[2]	20	0.40	1.25	2	-20 TO +70	.60 X .60 X .50
5.90-6.50	T5YL1[2]	20	0.40	1.25	2	-20 TO +70	.60 X .60 X .50
6.50-6.90	T6YE1[2]	20	0.40	1.25	2	-20 TO +70	.75 X .75 X .50
6.50-7.10	T6XW1[2]	20	0.40	1.25	2	-20 TO +70	.60 X .60 X .50

1. *THESE UNITS ARE SURFACE MOUNT TAB UNITS.*
2. *THESE UNITS ARE SUPPLIED WITH SMA CONNECTORS.*
3. *THESE UNITS HAVE SMA OUTPUT, MONITOR PORT AND TYPE NF ON RETURN PORT.*
4. *THIS UNIT HAS SMA ON INPUT, OUTPUT AND TYPE NF ON RETURN PORT.*
5. *T STANDS FOR ISOLATOR AND C STANDS FOR CIRCULATOR. MOST UNITS MAY BE SUPPLIED IN EITHER VERSION*

2236 Suite A Park Place, Minden, NV 89423 Phone: 775-783-9100 Fax: 775-783-9098
E-mail: circulators@sonomascientific.com Website: www.sonomascientific.com

昆山同凯电子有限公司

FIG.	'L'	'W'	'H'	'A'	'B'	'C'	'D'	'T'
1A	0.75	1.00	0.22	.570	.620	.245	.070	.025
1B	0.75	1.00	0.30	.570	.620	.245	.120	.025
1C	1.00	1.00	0.43	.820	.820	.320	.085	.050
1D	1.00	1.25	0.30	.820	.820	.310	.085	.050
2A	2.10	1.00	0.35	.960	.820	.300	.070	
2B	2.10	1.25	0.35	.960	.820	.300	.070	

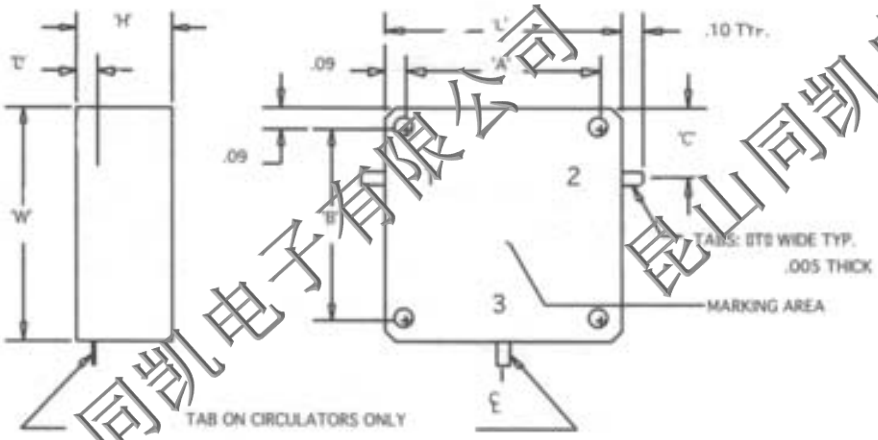

FIGURE 1*

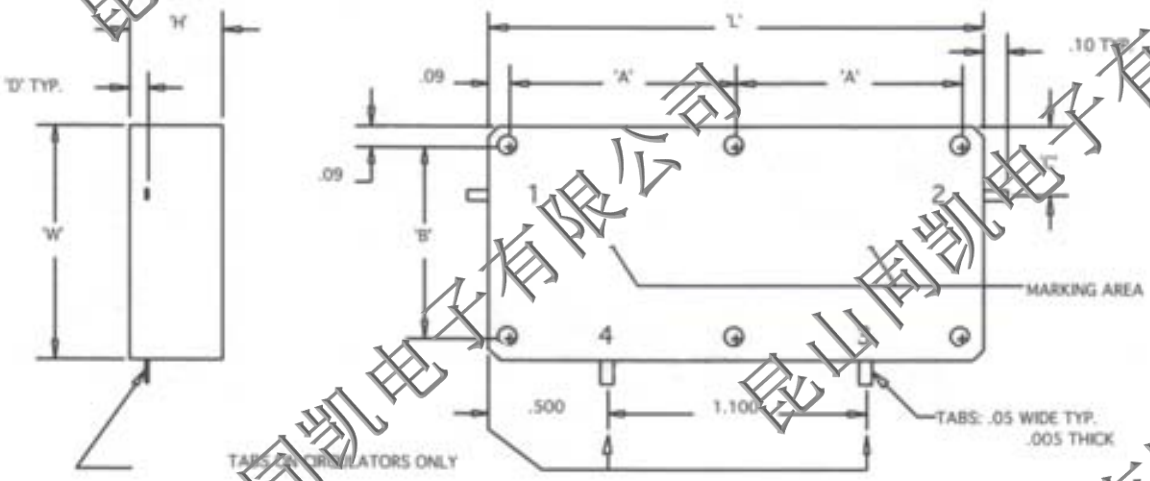

FIGURE 2*

昆山同凯电子有限公司

SONOMA SCIENTIFIC, INC.

Cellular/Inmarsat Direct Replacement Units

1 WATT TO 160 WATTS
ISOLATOR/CIRCULATORS
SURFACE MOUNT UNITS
LOW LOSS

FREQUENCY (GHz)	MODEL NUMBER	MINIMUM ISOLATION (DB)	MAXIMUM INSERTION LOSS (DB)	MAXIMUM VSWR	RATED POWER (WATTS)	OPERATING TEMPERATURE RANGE (°C)	See Figures Page 14
.851-.869	CY8K1	20	0.30	1.25	160	0 TO + 85	1C
.860-.890	TX8M6	23	0.35	1.22	65	-20 TO + 70	1D
.860-.890	TY8X1	22	0.35	1.22	5	-25 TO + 70	1C
.860-.890	TY8S2	40	0.60	1.25	65	-20 TO + 70	2B
.860-890	CY8S1	40	0.60	1.25	65	-20 TO + 70	2A
.860-.890	TY8U2	25	0.35	1.25	65	-20 TO + 70	1D
1.620-1.670	T1AJ1	20	0.40	1.25	50	-40 TO + 85	1A
1.805-1.880	T1AV1	20	0.30	1.25	65	-30 TO + 100	1B
1.930-1.970	T1AV2	20	0.30	1.25	65	-30 TO + 100	1B
1.930-1.990	T1AV3	20	0.30	1.25	65	-30 TO + 100	1B

1. *T STANDS FOR ISOLATOR AND C STANDS FOR CIRCULATOR.*
2. *MOST UNITS MAY BE SUPPLIED WITH MONITOR TABS (CONSULT FACTORY).*
3. *OTHER FREQUENCIES AND POWER LEVELS ARE AVAILABLE (CONSULT FACTORY).*
4. *MOST UNITS MAY BE SUPPLIED AS AN ISOLATOR OR A CIRCULATOR.*
5. *CONNECTORIZED UNITS ARE AVAILABLE (CONSULT FACTORY).*

昆山同凯电子有限公司

2236 Suite A Park Place, Minden, NV 89423 Phone: 775-783-9100 Fax: 775-783-9098
E-mail: circulators@sonomascientific.com Website: www.sonomascientific.com

SONOMA SCIENTIFIC, INC.

INMARSAT
ISOLATORS/CIRCULATORS
SMALL SIZE
LOW COST
SURFACE MOUNT

FREQUENCY (GHz)	MODEL NUMBER	MINIMUM ISOLATION (DB)	MAXIMUM INSERTION LOSS (DB)	MAXIMUM VSWR	RATED POWER (WATTS)	OPERATING TEMPERATURE RANGE (°C)	SIZE LxWxH (IN.)
1.620-1.670	T1AK2[1]	20	0.40	1.25	10	-55 TO + 85	.75 X .75 X .25
1.620-1.670	C1YF1[1]	23	0.30	1.25	60	-20 TO + 110	.75 X .75 X .30
1.620-1.670	T1YF1[1]	23	0.30	1.25	10	-20 TO + 110	.75 X .825 X .30
1.620-1.670	T1AZ4[1]	20	0.50	1.25	5	-20 TO + 70	.75 X .83 X .25
1.620-1.670	T1ZS1[1]	20	0.30	1.25	70	-20 TO + 55	.75 X .90 X .35
1.620-1.670	T1AJ1[1]	20	0.40	1.25	50	-40 TO + 85	.75 X 1.0 X .25
1.620-1.670	T1YS[illegible]	20	0.30	1.25	30	-35 TO + 85	1.0 X 1.3 X .35
1.620-1.670	T1AFK[illegible]	20	0.20	1.22	40	-55 TO + 85	1.22 X 1.415 X .686
1.620-1.670	T1AF2[2]	20	0.25	1.22	40	-55 TO + 85	1.22 X 1.415 X .686

1. *THESE UNITS ARE SURFACE MOUNT UNITS.*
2. *THESE UNITS ARE SUPPLIED WITH SMA CABLE CONNECTOR INTERFACE ON INPUT AND SURFACE MOUNT TAB ON OUTPUT*
3. *T STANDS FOR ISOLATOR AND C FOR CIRCULATOR.*
4. *MOST UNITS MAY BE SUPPLIED AS ISOLATORS OR CIRCULATORS.*
5. *CONNECTORIZED UNITS ARE AVAILABLE CONSULT FACTORY.*

昆山同凯电子有限公司

2236 Suite A Park Place, Minden, NV 89423 Phone: 775-783-9100 Fax: 775-783-9098
E-mail: circulators@sonomascientific.com Website: www.sonomascientific.com

SONOMA SCIENTIFIC, INC.

PCS
ISOLATORS & CIRCULATORS

HIGH POWER
LOW INSERTION LOSS
SURFACE MOUNT UNITS

CONNECTORIZED UNITS
SPECIAL DESIGNS AVAILABLE

FREQUENCY (GHZ)	MODEL NUMBER	ISOLATION (DB) MIN.	INSERTION LOSS (DB) MAX.	VSWR MAX.	RATED POWER (WATTS)	OPERATING TEMPERATURE RANGE (°C)	SIZE L x W x T (INCHES)
1.850-1.910	T1ZU20[1]	20	0.30	1.22	1	0 TO + 70	.75 X .75 X .75
1.850-1.990	T1CN1[1]	20	0.25	1.22	1	0 TO + 70	1.0 X 1.0 X .35
1.900-2.300	T1AZ9[1]	20	0.50	1.20	7	-30 TO + 75	.75 X .83 X .25
1.930-1.990	C1ZL4[1]	20	0.50	1.25	10	-20 TO + 70	.577 DIA X 0.21
1.930-1.990	T1ZU21[1]	20	0.30	1.22	1	0 TO + 70	.75 X .75 X .25
1.930-1.990	C1BC2[1]	25	0.30	1.20	100	-20 TO + 70	.75 X .75 X .25
1.930-1.990	C1ZU[illegible][1]	22	0.35	1.17	100	-10 TO + 70	.75 X .75 X .25
1.930-1.990	C1ZU7[1]	22	0.35	1.20	5	-30 TO + 70	.75 X .75 X .25
1.930-1.990	T1ZU19[1]	20	0.40	1.25	1	-20 TO + 70	.75 X .75 X .25
1.930-1.990	T1AZ5[1]	20	0.40	1.25	6	0 TO + 70	.75 X .83 X .25
1.930-1.990	T1AZ2[1]	20	0.40	1.25	20	-40 TO + 95	.75 X .83 X .25
1.930-1.990	T1BQ2[1]	20	0.40	1.25	45	-20 TO + 70	.75 X .83 X .25
1.930-1.990	C1YR4[1]	25	0.30	1.12	50	-20 TO + 85	.950 DIA. X .35
1.930-1.990	T1AR1[1]	25	0.25	1.15	30	-20 TO + 70	1.0 X 1.0 X .50
1.930-1.990	T1CD1[1]	20	0.25	1.25	50	0 TO + 65	1.0 X 1.0 X .50
1.930-1.990	T1AH2[1]	25	0.30	1.25	50	-20 TO + 85	1.0 X 1.25 X .30
1.930-1.990	T1BJ1[3]	23	0.35	1.15	50	-10 TO + 85	1.16 X 1.57 X .88
1.930-1.990	C1CB5[4]	50	0.50	1.20	10	-20 TO + 70	1.5 X .75 X .25
1.930-1.990	T1BE4[4]	50	0.50	1.20	20	-20 TO + 70	1.5 X .94 X .25
1.930-1.990	T1CB5[4]	50	0.50	1.25	10	-20 TO + 70	1.5 X .94 X .25
1.930-1.990	T1BF1[3]	23	0.25	1.15	25	-10 TO + 55	1.5 X 1.55 X 1.1
1.930-1.990	T1AN3[3]	25	0.25	1.15	10	-10 TO + 60	1.5 X 1.62 X 1.1
1.930-1.990	T1CB[illegible][illegible]	50	0.40	1.25	10	-20 TO + 70	2.0 X 1.0 X .375

1. *THESE UNITS ARE SURFACE MOUNT TAB UNITS.*
2. *THESE UNITS ARE DOUBLE JUNCTION UNITS SUPPLIED WITH SMA CONNECTORS.*
3. *THESE UNITS ARE SUPPLIED WITH N INPUT AND SMA OUTPUT CONNECTORS.*
4. *THESE UNITS ARE DOUBLE JUNCTION UNITS WITH SURFACE MOUNT TABS.*
5. *MOST UNITS MAY BE SUPPLIED AS ISOLATORS OR CIRCULATORS.*
6. *MOST UNITS MAY BE SUPPLIED WITH POWER MONITOR PROBES (CONSULT FACTORY).*
7. *T STANDS FOR ISOLATOR AND C STANDS FOR CIRCULATOR.*

2236 Suite A Park Place, Minden, NV 89423 Phone: 775-783-9100 Fax: 775-783-9098
E-mail: circulators@sonomascientific.com Website: www.sonomascientific.com

昆山同凯电子有限公司

SONOMA SCIENTIFIC, INC.

PCN
ISOLATORS & CIRCULATORS

HIGH POWER
LOW INSERTION LOSS
SURFACE MOUNT UNITS

CONNECTORIZED UNITS
SPECIAL DESIGNS AVAILABLE

FREQUENCY (GHz)	MODEL NUMBER	MINIMUM ISOLATION (DB)	MAXIMUM INSERTION LOSS (DB)	MAXIMUM VSWR	RATED POWER (WATTS)	OPERATING TEMPERATURE RANGE (°C)	SIZE LXWXH (IN.)
1.700-1.900	T1AB1[1]	20	0.40	1.25	1	-20 TO + 70	.75 X .75 X .25
1.700-2.000	T1AU2[4]	20	0.25	1.25	5	-20 TO + 70	1.5 X 1.61 X 1.1
1.710-1.850	T1ZU12[1]	22	0.35	1.15	5	-10 TO + 60	.75 X .75 X .25
1.750-1850	C1BX3[1]	20	0.30	1.22	150	-30 TO + 90	1.0 X 1.0 X .35
1.805-1.880	C1BC1[1]	25	0.30	1.12	100	-20 TO + 70	.75 X .75 X .25
1.805-1.880	C1ZU2[1]	23	0.35	1.15	10	-20 TO + 70	.75 X .75 X .25
1.805-1.880	C1ZU1[1]	20	0.40	1.25	40	-20 TO + 70	.75 X .75 X .25
1.805-1.880	T1ZU15[1]	20	0.30	1.25	2	-20 TO + 70	.75 X .75 X .26
1.805-1.880	T1BZ3[1]	20	0.40	1.25	6	-20 TO + 70	.75 X .83 X .25
1.805-1.880	T1AZ1[1]	20	0.40	1.25	20	-20 TO + 70	.75 X .83 X .25
1.805-1.880	T1BQ1[1]	20	0.40	1.25	45	-20 TO + 70	.75 X 1.0 X .25
1.805-1.880	T1CP1[1]	20	0.40	1.25	45	-20 TO + 70	.75 X 1.0 X .25
1.805-1.880	C1YR5[1]	25	0.30	1.12	50	-20 TO + 85	.950 DIA X .35
1.805-1.880	C1ZE2[1]	20	0.50	1.25	40	-20 TO + 70	.950 DIA X .35
1.805-1.880	C1YR1[1]	22	0.40	1.15	10	-10 TO + 85	.950 DIA X .35
1.805-1.880	C1AR2[1]	23	0.30	1.20	45	-20 TO + 70	1.0 X 1.0 X .50
1.805-1.880	T1AH1[1]	25	0.30	1.25	50	-30 TO + 70	1.0 X 1.25 X .25
1.805-1.880	C1CB1[3]	50	0.50	1.20	10	-20 TO + 70	1.5 X .75 X .25
1.805-1.880	T1CB1[3]	50	0.50	1.20	10	-20 TO + 70	1.5 X .94 X .25
1.805-1.880	T1BE2[3]	50	0.50	1.20	20	-20 TO + 70	1.5 X .94 X .25
1.805-1.880	T1CB15[3]	50	0.50	1.25	6	-10 TO + 80	1.5 X .94 X .35
1.805-1.880	T1AN1[2]	25	0.25	1.15	20	-10 TO + 60	1.5 X 1.62 X 1.1

1. *THESE UNITS ARE SURFACE MOUNT TAB UNITS.*
2. *THESE UNITS ARE SUPPLIED WITH AN N INPUT AND SMA OUTPUT CONNECTOR.*
3. *THESE UNITS ARE DOUBLE JUNCTION WITH SURFACE MOUNT TABS.*
4. *THESE UNITS ARE SUPPLIED WITH N CONNECTORS.*
5. *MOST UNITS MAY BE SUPPLIED AS ISOLATORS OR CIRCULATORS.*
6. *MOST UNITS MAY BE SUPPLIED WITH POWER MONITOR PROBES (CONTACT FACTORY).*
7. *T STANDS FOR ISOLATOR AND C CIRCULATOR.*

2236 Suite A Park Place, Minden, NV 89423 Phone: 775-783-9100 Fax: 775-783-9098
E-mail: circulators@sonomascientific.com Website: www.sonomascientific.com

昆山同凯电子有限公司

SONOMA SCIENTIFIC, INC.

EGSM
ISOLATORS AND CIRCULATORS

HIGH POWER
LOW INSERTION LOSS
SURFACE MOUNT UNITS

CONNECTORIZED UNITS
SPECIAL DESIGNS AVAILABLE

FREQUENCY (GHz)	MODEL NUMBER	MINIMUM ISOLATION (DB)	MAXIMUM INSERTION LOSS (DB)	MAXIMUM VSWR	RATEDPOWER (WATTS)	OPERATING TEMPERATURE RANGE (°C)	SIZE (LXWXH) (IN.)
.800-.970	TX8Z1[2]	20	0.50	1.25	10	-10 TO +60	1.6 X 1.7 X .45
.825-.960	CY8F1[2]	22	0.40	1.25	10	-30 TO +60	1.6 X 1.7 X .45
.880-.915	TX9L8[1]	30	0.50	1.25	5	-20 TO +70	1.0 X 1.0 X .35
.880-.960	TX9L6[1]	20	0.50	1.25	5	-20 TO +70	1.0 X 1.0 X .35
.890-.960	CX8M24[1]	20	0.50	1.25	50	-20 TO +70	.950 DIA X .350
.890-.960	CX9A6[2]	20	0.40	1.25	5	0 TO +70	1.25 X 1.25 X .56
.917-.960	TX8H8[1]	20	0.60	1.25	5	-30 TO +60	.787 X .787 X .35
.917-.960	TX9P1[2]	20	0.60	1.30	20	-30 TO +60	1.6 X 1.7 X .45
.925-.960	CX8M35[1]	20	0.40	1.25	20	-20 TO +70	.950 DIA X .35
.925-.960	TX9X1[1]	20	0.30	1.25	12	-20 TO +85	1.0 X 1.25 X .30
.925-.960	CX9L12[2]	22	0.40	1.25	10	-40 TO +85	1.0 X 1.0 X .35
.925-.960	TX9T9[1]	30	0.50	1.25	5	-20 TO +60	1.0 X 1.0 X .35
.925-.960	TX9V1[1]	20	0.30	1.25	65	-20 TO +85	1.0 X 1.25 X .30
.925-.960	TY9A1[1]	20	0.25	1.25	5	-30 TO +70	1.25 X 1.25 X .51
.925-.960	CX9T1[4]	50	0.60	1.25	15	-20 TO +70	2.0 X 1.0 X .40
.925-.960	TX9T1[4]	50	0.80	1.25	6	-20 TO +70	2.0 X 1.0 X .40
.925-.960	TX9Y1[3]	50	0.40	1.15	40	-20 TO +70	3.5 X 2.0 X 1.02
.925-.960	CX9L4[1]	20	0.40	1.25	30	-20 TO +70	1.0 X 1.0 X .35
.925-960	TY9B1[1]	45	0.60	1.25	40	-20 TO +70	2.0 X 1.25 X .40
.928-.960	TX9N3[1]	20	0.40	1.25	20	-20 TO +70	1.0 X 1.3 X .35
.935-.960	CX9F1[1]	22	0.40	1.15	100	-20 TO +70	.950 DIA X .35
.935-.960	CX9F4[1]	20	0.35	1.25	40	-20 TO +70	.950 DIA. X .35
.935-.960	CX9L1[1]	20	0.35	1.25	40	-10 TO +60	1.0 X 1.0 X .35
.935-.960	TX8G3[1]	15	0.40	1.15	65	0 TO +70	1.0 X 1.3 X .35
.935-.960	TX9R1[1]	20	0.25	1.20	30	-20 TO +70	1.3 X 1.2 X .5
.935-.960	CX8M8[1]	22	0.40	1.25	100	0 TO +85	.950 DIA X .35

1 *These units are surface mount tab units.*
2 *These units are supplied with SMA connectors.*
3 *These units are supplied with N input and SMA output connectors.*
4 *These units are double junction surface mount with power monitor probe.*
5 *Most units may be supplied in either version.*
6 *Most units may be supplied power monitor probes (Consult factory)*

2236 Suite A Park Place, Minden, NV 89423 Phone: 775-783-9100 Fax: 775-783-9098
E-mail: circulators@sonomascientific.com Website: www.sonomascientific.com

昆山同凯电子有限公司

SONOMA SCIENTIFIC, INC.

CELLULAR
ISOLATORS
1 WATT TO 160 WATTS
SURFACE MOUNT UNITS

FREQUENCY (GHz)	MODEL NUMBER	MINIMUM ISOLATION (DB)	MAXIMUM INSERTION LOSS (DB)	MAXIMUM VSWR	RATED POWER (WATTS)	OPERATING TEMPERATURE RANGE (°C)	SIZE LxWxH (IN.)
.800-.850	TX8M25[3]	22	0.40	1.25	1	-20 TO +70	.950 DIA X .350
.800-.900	TY8R2[2]	20	0.40	1.25	1	0 TO +50	1.6 X 1.7 X .45
.820-.900	TX8G10[3]	20	0.40	1.25	5	0 TO +50	1.0 X 1.3 X .35
.824-.849	TY8C2[3]	18	0.50	1.30	5	-20 TO +70	.787 X .787 X .3
.824-.849	TX8M28[3]	20	0.40	1.25	1	-20 TO +70	.950 DIA X .35
.824-.849	TA8F2[3]	22	0.30	1.25	65	0 TO +65	1.0 X 1.25 X .3
.824-.849	TY8V1[3]	20	0.30	1.25	1	0 TO +60	1.0 X 1.25 X.30
.845-.896	TY8D1[3]	20	0.40	1.25	30	-20 TO +90	1.0 X 1.0 X .40
.850-.870	TX8G9[3]	20	0.40	1.25	75	-30 TO +90	1.0 X 1.3 X .35
.851-.866	TY8C3[3]	20	0.40	1.25	5	-20 TO +70	.787 X .787 X .31
.851-.866	TY8Z1[4]	60	0.35	1.15	30	0 TO +50	3.5 X 2.0 X 1.0
.860-.900	TX8H1[3]	20	0.60	1.30	5	-20 TO +70	.787 X .787 X .35
.860-.900	TX8G2[3]	25	0.40	1.30	65	-20 TO +70	1.0 X 1.0 X .35
.860-.900	TY8L1[3]	20	0.40	1.25	10	-20 TO +70	1.0 X 1.0 X .35
.860-.900	TX8M6[3]	23	0.35	1.25	50	-20 TO +85	1.0 X 1.25 X .3
.860-.900	TX8G7[3]	20	0.40	1.25	50	0 TO +80	1.0 X 1.3 X .35
.860-.960	TA8C1[3]	23	0.35	1.25	6	-30 TO +70	1.0 X 1.0 X .4
.864-.868	TX8M29[3]	23	0.40	1.15	1	-20 TO +70	.950 DIA X .350
.868-.895	TY8A1[3]	23	0.40	1.15	8	-20 TO +70	1.0 X 1.0 X .57
.869-.894	TX8M27[3]	20	0.40	1.25	1	-20 TO +70	.950 DIA X .350
.869-.894	TA8F1[3]	22	0.30	1.25	65	0 TO +75	1.0 X 1.25 X .3
.869-.895	TA8H1[4]	25	0.50	1.15	5	0 TO +85	1.51 X 1.47 X .75

1. *MOST UNITS MAY BE SUPPLIED WITH POWER MONITOR PROBES.*
2. *THESE UNITS SUPPLIED WITH SMA CONNECTORS.*
3. *THESE UNITS ARE SURFACE MOUNT DESIGNS.*
4. *SUPPLIED WITH N CONNECTORS.*

昆山同凯电子有限公司

2236 Suite A Park Place, Minden, NV 89423 Phone: 775-783-9100 Fax: 775-783-9098
E-mail: circulators@sonomascientific.com Website: www.sonomascientific.com

SONOMA SCIENTIFIC, INC.

CELLULAR
CIRCULATORS
1 WATT TO 300 WATTS
SURFACE MOUNT UNITS

FREQUENCY (GHz)	MODEL NUMBER	MINIMUM ISOLATION (DB)	MAXIMUM INSERTION LOSS(DB)	MAXIMUM VSWR	RATED POWER (WATTS)	OPERATING TEMPERATURE RANGE (°C)	SIZE LxWxH (IN.)
.770-.790	CX7H1	23	0.50	1.15	10	-20 TO +70	.950 X DIA .350
.800-.850	CX8M21	22	0.40	1.25	200	-20 TO +70	.950 DIA X .350
.800-.894	CX8M26	18	0.50	1.30	200	-20 TO +70	.950 DIA X .350
.805-.815	CX8M18	23	0.40	1.15	200	-20 TO +70	.950 X DIA .350
.806-.870	CX8M7	20	0.40	1.25	5	-20 TO +70	.950 DIA X .350
.820-.900	CX8M22	20	0.30	1.25	20	-10 TO +85	.950 DIA X .350
.820-.900	CX8M3	20	0.50	1.25	200	-20 TO +70	.950 DIA X .350
.820-.900	CY8F4	20	0.30	1.25	300	-20 TO +70	1.6 X 1.7 X .45
.824-.849	CX8M19	20	0.40	1.25	10	-30 TO +60	.950 DIA X .350
.824-.849	CX8M11	18	0.50	1.30	100	-20 TO +70	.950 DIA X .350
.824-.849	CX8M23	25	0.30	1.25	50	-20 TO +70	.950 X DIA .350
.824-.849	CX8M16	20	0.30	1.25	1	-20 TO +70	.950 X DIA .350
.825-.960	CY8F1[1]	20	0.40	1.25	10	-20 TO +70	1.6 X 1.7 X .45
.849-.851	CX8M9	22	0.40	1.25	200	-20 TO +70	.950 X DIA .350
.850-.870	CX8M10	22	0.40	1.25	200	-30 TO +95	.950 X DIA .350
.851-.866	CX8L2[2]	25	0.25	1.15	150	-30 TO +60	1.6 X 1.7 X .45
.860-.900	CX8M4	22	0.35	1.25	200	-20 TO +70	.950 DIA X .350
.860-.900	CX8M24	20	0.40	1.25	200	-20 TO +70	.950 DIA X .350
.865-.900	CX8L1[2]	25	0.25	1.15	300	-30 TO +60	1.6 X 1.7 X .45
.872-.950	CX8M15	20	0.50	1.25	200	-20 TO +70	.950 DIA X .350

1. *THESE UNITS ARE SUPPLIED WITH SMA CONNECTORS.*
2. *THESE UNITS ARE SUPPLIED WITH N CONNECTORS.*
3. *ALL OTHER ARE SURFACE MOUNT TAB UNITS.*

昆山同凯电子有限公司

2236 Suite A Park Place, Minden, NV 89423 Phone: 775-783-9100 Fax: 775-783-9098
E-mail: circulators@sonomascientific.com Website: www.sonomascientific.com

SONOMA SCIENTIFIC, INC.

SPECIAL PRODUCTS DESIGNED TO CUSTOMER SPECIFICATIONS

FREQUENCY (GHZ)	MODEL NUMBER ISOLATOR	MINIMUM ISOLATION (DB)	MAXIMUM INSERTION LOSS (DB)	MAXIMUM VSWR	CONNECTOR TYPE	RATED POWER (WATTS) AVERAGE	OPERATING TEMPERATURE RANGE (°C)	SIZE LxWxH (IN.)
1.435 - 2.41	T1XL1	20	0.5	1.30	NF-SMA	1	0 TO +50	2.5x2.52x1.0
1.6[illegible] - 1.66	T1YF1	25	[illegible]	1.25	TAB	10	-20 TO +85	.75x.75x.30
1.70 - 1.40	T1XH1	20	0.[illegible]	1.25	SMA	1	-20 TO +70	1.58x1.62x.63
1.60 - 1.80	T1XM4	20	0.4	1.25	SMA	2	-54 TO +85	1.0x1.015x.54
1.37 - 1.58	T1XU3	23	0.3	1.15	SMA	1	0 TO +50	1.25x1.25x.60
1.50 - 2.60	T1XL2	20	0.5	1.25	SMA	1	0 TO +70	2.5x2.52x.10
1.75 - 1.85	T1YH1	18	0.5	1.30	SMA-TNC	1	0 TO +70	1.2x1.85x.95
1.00 - 1.40	T1YG1	16	0.5	1.35	NF	150	0 TO +50	2.0x2.5x.73
1.50 - 1.70	T1XQ1	20	0.4	1.25	NF	1	0 TO +50	1.38x1.75x.75
1.40 - 1.60	T1XM1	20	0.4	1.25	SMA	1	0 TO +50	1.0x1.015x.54
2.20 - 2.29	T2XF2	20	0.3	1.20	SPEC	1	0 TO +50	.75x.75x.50
2.20 - 2.30	T2XR4	20	0.5	1.20	TAB	1	-40 TO +70	.75x.75x.32
2.90 - 3.20	T2XQ2	18	0.6	1.30	SMA	1	0 TO +70	.75x.75x.50
3.10 - 3.60	T3XH1	20	0.4	1.25	NF	75	0 TO +50	1.75x2.25x.75
4.00 - 6.00	T4XM1	20	0.[illegible]	1.25	SMA	1	0 TO +50	.71x.98x.75
4.875 - 5.125	T4XB1	20	0.[illegible]	1.20	SMA	1	0 TO +50	.70x.87x..65
5.40 - 6.00	T5XM1	20	0.3	1.20	SMA	1	0 TO +50	.50x.60x.50
5.00 - 7.00	T5YA1	20	0.5	1.25	SMA	1	0 TO +50	1.0x1.0x.56
7.00 - 9.60	T7XF3	20	0.4	1.25	SMA	1	-54 TO +85	.85x1.0x.63
7.25 - 7.75	T7XH1	20	0.4	1.20	NM	1	0 TO +50	1.0x1.0x1.0
7.25 - 7.75	T7XK3	20	0.4	1.20	SMA	1	-10 TO +50	.51x.68x.56
7.00 - 11.00	T7XF1	15	0.4	1.30	SMA	30	-50 TO +85	.75x1.0x1.0
7.40 - 17.50	T7XL1	[illegible]	.85	1.40	SMA	1	-10 TO +85	.60x.77x.54
8.00 - 12.40	T8XD1	18	0.5	1.30	SMA	1	0 TO +50	.85x1.16x.63
8.00 - 8.50	T8XR1	40	0.6	1.20	SMA	1	0 TO +70	1.5x.90x.50
8.00 - 18.00	T8XD[illegible]	32	1.4	1.35	SMA	1	0 TO +50	1.82x1.6[illegible]x.56
8.00 - 18.50	T8XS1	16	0.8	1.40	SMA	1	0 TO +50	.51x.68x.56
8.00 - 14.00	T8XL1	17	0.7	1.35	SMA	1	0 TO +50	.50x.58x.30
9.15 - 9.35	T9XB1	23	0.2	1.15	SMA	1	0 TO +50	.70x1.04x.65
9.00 - 13.00	T9XM1	40	1.0	1.25	SMA	1	0 TO +50	1.5x.90x.50
9.00 - 13.00	T9XN1	20	0.4	1.20	SMA	1	0 TO +50	.51x.68x.56
9.30 - 9.40	T9XQ1	45	0.5	1.20	SMA	2	-54 TO +85	1.5x.90x.50
11.00 - 15.00	T11A1	23	0.5	1.25	SMA	1	0 TO +50	.51x.68x.56
12.50 - 13.50	T12L1	25	0.35	1.20	SMA	1	0 TO +50	.51x.68x.56
12.60 - 13.10	T12A1	40	1.0	1.20	SMA	1	0 TO +50	1.5x.90x.50
17.60 - 21.60	T17C1	23	0.5	1.20	SMA	1	0 TO +50	.51x.68x.56
19.50 - 20.50	T20A1	25	0.5	1.20	SMA	1	0 TO +50	.51x.68x.56
20.00 - 24.00	T20C1	20	0.5	1.25	SMA	1	0 TO +50	.38x.50x.38

FREQUENCY (GHZ)	MODEL NUMBER CIRCULATOR	MINIMUM ISOLATION (DB)	MAXIMUM INSERTION LOSS (DB)	MAXIMUM VSWR	CONNECTOR TYPE	RATED POWER (WATTS) AVERAGE	OPERATING TEMPERATURE RANGE (°C)	SIZE LxWxH (IN.)
1.51 - 1.56	C1XM2	NA	0.3	1.25	SMA	20	0 TO +60	1.0x1.015x.54
1.50 - 1.66	C1XS1	NA	0.3	1.25	NF	20	0 TO +60	1.5x1.20x.75
1.37 - 1.58	C1XV3	NA	0.3	1.15	SMA	1	-45 TO +85	1.25x1.25x.60
1.50 - 1.70	C1ZE1	NA	0.3	1.25	TAB	25	-40 TO +60	.95 Dia. x.35
1.20 - 1.40	C1XV1	NA	0.3	1.15	SMA	80	-45 TO +85	1.25x1.25x.60
2.90 - 3.40	C2XJ1	NA	0.3	1.15	SMA	2	0 TO +50	1.25x1.25x.63
2.45 - 2.47	C2XS1	NA	0.3	1.25	NF/M	300	0 TO +50	1.0x1.3x1.0
3.70 - 6.50	C3XM1	NA	0.4	1.25	SMA	1	0 TO +60	1.0x1.0x.63
4.00 - 5.00	C4XS1	NA	0.3	1.20	SMA	1	0 TO +50	1.0x1.0x.50
17.50 - 21.50	C18B2	NA	0.5	1.25	SMA	1	0 TO +50	.51x.68x.56
21.20 - 23.60	C21B1	NA	0.8	1.25	SMA	1	0 TO +50	.38x.50x.38

NOTES

1 Please consult factory for exact connectors and outline drawing.
2 All connector combinations are available.
3 The above units represent a sample of special products.
Please consult factory for your special application.

昆山同凯电子有限公司

2236 Suite A Park Place, Minden, NV 89423 Phone: 775-783-9100 Fax: 775-783-9098
E-mail: circulators@sonomascientific.com Website: www.sonomascientific.com

SONOMA SCIENTIFIC, INC.

MICROSTRIP COMPATIBLE

- WIDEBAND AND NARROWBAND
- HIGH ISOLATION
- LOW INSERTION LOSS
- LOW VSWR
- SMALL SIZE

FREQUENCY (GHZ)	MODEL NUMBER		MINIMUM ISOLATION (DB)	MAXIMUM INSERTION LOSS (DB)	MAXIMUM VSWR	RATED POWER (WATTS)	OPERATING TEMPERATURE RANGE (°C)	SIZE LxWxH (IN.)
	ISOLATOR	CIRCULATOR				AVERAGE		
	T3XB1		20	0.4	1.25	1	0	.75x1.15x.165
3.10 - 3.50	T4XF1		20	0.4	1.30	1	TO +85	.592x.691x.255
	T4XE2		20	0.4	1.25	1	-	.59x.59x.275
4.20 - 4.60	T4XR1		17	0.5	1.4	1	10 TO +50	.500 Dia.x.250
	T5YG1		20	0.5	1.25	1	-	.575x.125
4.40 - 5.00	T5YP1		20	0.4	1.25	2	10 TO +60	.675x.20
4.40	T5XC1		20	0.4	1.20	1	-	.625Dia.x.15
- 5.3	T5XB1		20	0.5	1.25	2	30 TO +70	.630x.375x.21
5.0 -	T5XS3		20	0.5	1.25	1	0	.630x.630x.220
6.5	T5XP2		20	0.4	1.25	2	TO +85	.45x.70x.20
5.2 -		C5XP1	20	0.4	1.25	3		.50 Dia.x.15
5.9	T5XP1		20	0.4	1.20	2	20 TO +70	.50x.70x.20
	T5YR2		20	0.4	1.25	2	-	.375x.62x.21
5.40 - 5.60	T5XA1		20	0.4	1.20	2	20 TO +70	.623 Dia.x.15
	T6XE1		18	0.5	1.30	1	-	.50x.50x.20
5.40 - 5.90	T6XF2		20	0.5	1.30	1	40 TO +70	.45x.70x.20
5.8	T7XC1		20	0.5	1.25	1	-	.40x.50x.25
7.1	T7XP1		20	0.4	1.25	1	30 TO +70	.375x.60x.20
	T7XW1		18	0.4	1.25	2	-	.350x.600x.200
5.825 - 6.425	T7XM2		20	0.5	1.20	1	40 TO +70	.63x.62x.23
	T8XJ1		20	0.4	1.25	1	-	.350x.370x.100
5.825 - 6.425	T9XR1		20	0.4	1.25	1	40 TO +70	.35x.60x.20
5.90	T9XE1		20	0.4	1.25	1	-	.35x.47x.20

NOTES

1. Tin-lead solder with 2% silver is suggested for soldering.
2. Average rated power shown is the rating of the standard isolator termination.
3. Higher power is available on special order.
4. Units may be available with and without carriers.
5. Please consult factory for outline drawings.
6. Units may be supplied as circulators.

2236 Suite A Park Place, Minden, NV 89423 Phone: 775-783-9100 Fax: 775-783-9098
E-mail: circulators@sonomascientific.com Website: www.sonomascientific.com

昆山同凯电子有限公司

SONOMA SCIENTIFIC, INC.

CELLULAR / SATCOM COMPATIBLE ISOLATORS & CIRCULATORS

- DROP-IN DESIGN
- LOW INSERTION LOSS
- LOW VSWR
- HIGH ISOLATION

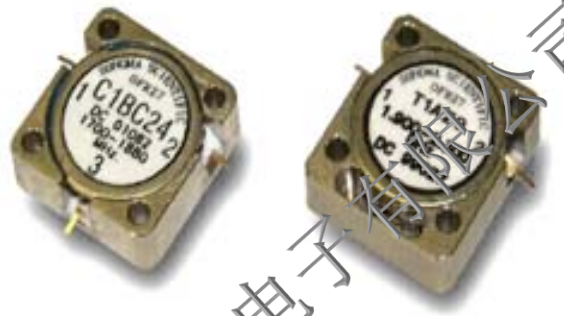

FREQUENCY (GHZ)	MODEL NUMBER		MINIMUM ISOLATION (DB)	MAXIMUM INSERTION LOSS (DB)	MAXIMUM VSWR	RATED POWER (WATTS)	OPERATING TEMPERATURE RANGE (°C)	SIZE LxWxH (IN.)
	ISOLATOR	CIRCULATOR				AVERAGE		
.800 - .900	TX8NI		20	0.5	1.25	1	-20 TO +70	1.5x1.5x.30
.824 - .849	TX8H2		18	0.6	1.25	10	-20 TO +70	.787x.787x.35
.850 - .870	TX8G5		20	0.4	1.25	100	-20 TO +70	1.0x1.3x.35
.850 - .870	TX8J1		40	0.7	1.25	55	-20 TO +70	3.9x1.73x.70
.850 - .894	TX8U1		40	1.0	1.30	50	-20 TO +70	1.5x1.5x.50
.860 - .900	TX8G1		20	0.5	1.25	50	-20 TO +70	1.0x1.3x.35
.860 - .900	TX8H1		20	0.6	1.30	5	-20 TO +70	.787x.787x.35
.860 - .900		CX8H1	NA	0.6	1.30	25	-20 TO +70	.787x.787x.35
.860 - .900	TX8G2		25	0.4	1.30	65	-20 TO +70	1.0x1.3x.35
.860 - .900		CX8M5	NA	0.35	1.25	200	-20 TO +70	.950 Dia. x.35
.860 - .870	TX8M6		23	0.35	1.25	50	-20 TO +70	1.0x1.25x.30
.860 - .900		CX8H4	NA	0.6	1.30	10	-20 TO +70	.787x.787x.35
.869 - .894	TX8G6		23	0.35	1.15	10	-20 TO +70	1.0x1.3x.35
.870 - .896	TX8T1		40	0.9	1.30	10	-20 TO +70	.965x1.1x.60
.872 - .915	TX8H7		20	0.6	1.30	5	-20 TO +70	.787x.787x.35
.890 - .915	TX8H5		20	0.6	1.25	5	-20 TO +70	.787x.787x.35
.895 - .935		CX9K1	NA	0.4	1.25	100	-20 TO +70	1.0x1.0x.35
.900 - .930		CX9F2	NA	0.4	1.25	100	-20 TO +70	.950 Dia x.35
.915 - .917	TX8G4		30	0.5	1.25	1	-20 TO +70	1.0x1.3x.35
.915 - .917	TX9J1		29	0.5	1.25	1	-20 TO +70	.780x.780x.30
.917 - .953		CX9E1	NA	0.7	1.40	100	-20 TO +70	.950 Dia x.35
.917 - .960	TX8H8		20	0.4	1.30	5	-20 TO +70	.787x.787x.35
.935 - .960	TX8G3		25	0.4	1.25	65	-20 TO +70	1.0x1.3x.35
.935 - .960		CX9F1	NA	0.4	1.15	100	-20 TO +70	.950 Dia x.35
1.435 - 1.545	T1ZG1		20	0.5	1.25	10	-20 TO +70	.75x.75x.31
1.50 - 1.70		C1ZE1	NA	0.4	1.25	25	-20 TO +70	.950 Dia x.35
1.53 - 1.56	T1XP1		20	0.4	1.25	[illegible]	-20 TO +70	1.2x1.2x.50
1.60 - 1.64	T1YD1		20	0.3	1.20	10	-20 TO +70	1.2x1.2x.56
1.62 - 1.66	T1YF1		20	0.3	1.25	10	-20 TO +70	.75x.625x.30
1.62 - 1.66		C1YF1	NA	0.3	1.25	60	-20 TO +70	.75x.75x.30
1.62 - 1.67	T1YQ1		20	0.3	1.20	30	-20 TO +70	1.0x1.3x.35
1.70 - 2.10	T1YC1		20	0.5	1.20	5	-20 TO +70	1.18x1.48x.56
1.71 - 1.85	T1ZH1		20	0.7	1.25	10	-20 TO +70	.75x.75x.31
1.80 - 1.90		C1ZB1	NA	0.4	1.25	50	-20 TO +70	.75x.75x.35

NOTES

1 Higher power levels are available.
2 Other frequency ranges are available.
3 Other models available see new data sheets.

2236 Suite A Park Place, Minden, NV 89423 Phone: 775-783-9100 Fax: 775-783-9098
E-mail: circulators@sonomascientific.com Website: www.sonomascientific.com

昆山同凯电子有限公司

SONOMA SCIENTIFIC, INC.

STRIPLINE DROP-IN ISOLATORS & CIRCULATORS

UHF THRU S-BAND
HIGH ISOLATION
LOW INSERTION LOSS
LIGHT WEIGHT
LOW VSWR

FREQUENCY (GHZ)	MODEL NUMBER		MINIMUM ISOLATION (DB)	MAXIMUM INSERTION LOSS (DB)	MAXIMUM VSWR	RATED POWER (WATTS)	OPERATING TEMPERATURE RANGE (C)	SIZE LxWxH (IN.)
	ISOLATOR	CIRCULATOR				AVERAGE		
.135 - .154		CX1L1	18	0.4	1.30	150	-20 TO +85	5.5x5.0x.75
.146 - .147		CX1L2	17	0.5	1.35	150	-20 TO +85	5.5x5.0x.75
.154 - .170		CX1M1	20	0.4	1.25	150	-20 TO +85	5.5x5.0x.75
.338 - .378		CX3C1	17	0.5	1.30	200	0 TO +50	2.1x2.1x.5
.389 - .399	TX3D1		20	0.5	1.45	2	-30 TO+60	.787x.787x.35
.389 - .400		CX3E1	20	0.3	1.25	200	0 TO +65	1.75x1.75x.5
.403 - .440		CX4K1	18	0.5	1.30	150	-20 TO +70	1.75x1.75x.5
.403 - .430	TX4L2		45	0.7	1.20	15	0 TO +60	3.25x2.125x.55
.406 - .450	TX4K5		20	0.6	1.25	25	-25 TO +85	1.75x1.75x.5
.430 - .470		CX4K4	20	0.5	1.25	10	-10 TO +55	1.75x1.75x.5
.441 - .597		CX4Q1	18	0.7	1.25	200	-10 TO +50	1.57x1.57x.98
.450 - .512		CX4K2	18	0.4	1.30	150	-20 TO +70	1.75x1.75x.5
.450 - .470	TX4L1		46	0.7	1.20	15	0 TO +60	3.25x2.125x.55
.480 - .500	TX4N1		20	0.5	1.25	60	0 TO +85	1.5x1.8x.4
.480 - .500		CX4P1	22	0.4	1.25	30	-20 TO +70	1.35x1.35x.4
.600 - .700		CX6A1	18	0.5	1.40	40	-20 TO +89	1.5x1.5x.50
.600 - .800		CX6C1	17	0.5	1.35	80	-20 TO +80	1.6x1.5x.50
.700 - .800		CX7C1	17	0.5	1.35	40	-20 TO +80	1.5x1.5x.50
1.028-1.032	T1AQ2		25	0.5	1.20	10	-40 TO +85	1.0x1.1x.35
1.20 - 1.40	T1YJ1		17	0.5	1.35	1	0 TO +50	.78x.78x.35
1.20 - 1.40	T1ZD1		20	0.5	1.20	10	-40 TO +85	1.0x1.0x.50
1.435 - 1.545	T1ZG1		20	0.5	1.20	10	-10 TO +70	.75x.75x.31
1.53 - 1.56	T1XP1		20	0.4	1.25	1	-40 TO +75	1.0x1.0x.50
1.58 - 1.79	T1YT2		20	0.5	1.25	1	-10 TO +70	.75x.75x.32
1.60 - 1.64		C1XD1	20	0.5	1.25	50	-20 TO +60	1.3x1.4x.48
1.60 - 1.80	T1YE1		20	0.4	1.25	1	-10 TO +50	1.18x1.18x.30
1.62 - 1.66	T1YA1		20	0.4	1.25	40	-15 TO +70	.95x1.38x.56
1.62 - 1.66		C1YF1	23	0.3	1.25	60	-20 TO +85	.75x.75x.30
1.62 - 1.67	T1YQ1		20	0.3	1.20	30	-35 TO +85	1.0x1.0x.35
1.62 - 1.67		C1YK1	20	0.3	1.20	100	-50 TO +75	1.0x1.0x.40
1.70 - 2.10	T1YC1		20	0.5	1.20	5	-20 TO +70	1.18x1.18x.56
1.80 - 1.90		C1ZB1	20	0.4	1.25	50	-20 TO +70	.75x.75x.35
1.80 - 2.20	T1XD1*		20	0.4	1.25	1	0 TO +55	1.5x1.75x.75
2.00 - 2.30	T2YB1		20	0.6	1.25	10	0 TO +50	.787x.787x.35
2.20 - 2.30	T2XL1		16	0.5	1.45	1	0 TO +50	.75x.75x.25
3.10 - 3.50		C3XS1	20	0.3	1.20	15	0 TO +50	.580 Dia.x.30
3.60 - 4.20	T3XK1		20	0.4	1.25	2	-20 TO +70	.75x.75x.25

NOTES
1. Higher power levels are available.
2. Please consult factory for outline drawings.
3. Isolator & Circulator units are available. Please consult factory.
4. These units are supplied with SMA connectors.

2236 Suite A Park Place, Minden, NV 89423 Phone: 775-783-9100 Fax: 775-783-9098
E-mail: circulators@sonomascientific.com Website: www.sonomascientific.com

昆山同凯电子有限公司

COAXIAL ISOLATOR AND CIRCULATOR SPECIFICATION

SPECIFICATIONS

FREQUENCY (GHZ)	MODEL ISOLATOR "T" & "E" CIRCULATOR "C"	CONNECTOR TYPE	MINIMUM ISOLATION (DB)	MAXIMUM INSERTION LOSS (DB)	MAXIMUM VSWR	POWER (WATTS)† FWD	POWER (WATTS)† REV	OPERATING TEMPERATURE RANGE (°C)	SIZE LxWxH (IN.)
.192-.210	TX1K1	SMA	15	1.0	1.45:1	10	1	+10 to +50	3.25x3.25x0.75
.150-.160	CX1G1	N	20	0.30	1.25:1	150	150	0 to +50	6.00x6.00x1.00
.200-.240	CX2B1	N	18	0.50	1.25:1	100	100	0 to +50	4.00x4.00x0.75
.216-.220	CX2C1	SMA	23	0.50	1.25:1	50	50	-40 to +50	2.60x2.60x0.75
.216-.220	TX2G1	N	45	1.0	1.25:1	150	150	-30 to +60	5.00x2.80x0.80
.30-.40	TX3B1	SMA	18	0.50	1.30:1	10	10	-30 to +60	4.00x4.00x0.75
.32-.33	TX3F1	N	60	0.50	1.20:1	100	100	-30 to +60	4.50x2.500x1.00
.39-.48	CX3A1	N	18	0.50	1.25:1	100	100	0 to +50	2.50x2.50x0.75
.47-.65	CX4F1	TNC	18	0.60	1.30:1	100	100	-40 to +50	2.00x1.95x0.75
.580-.736	CX5M1	SC	20	1.00	1.22:1	1000	1000	0 to +50	3.00x3.00x1.00
.650-.750	TX6D1	SMA	20	0.50	1.25:1	50	1	0 to +50	1.50x1.50x0.65
.800-1.000	TX8B1	N	18	0.40	1.25:1	150	150	0 to +50	2.00x2.50x0.75
.800-1.000	TX8Z3	SMA	18	0.50	1.30:1	10	1	-10 to +60	1.50x1.75x0.45
.96-1.215	CX9Q1	SMA	18	0.50	1.30:1	1500	80	-30 to +60	1.50x1.50x0.50
.975-1.025	TX9A2	SMA	20	0.30	1.25:1	10	12	0 to +50	1.25x1.25x0.57
1.0-1.3	T1XK3	SMA	18	0.60	1.30:1	10	1	+10 to +40	2.60x2.60x0.75
1.2-1.4	T1XV1	SMA	20	0.30	1.15:1	10	1	-48 to +86	1.25x1.25x0.60
1.5-2.6	T1XJ2	SMA	20	0.50	1.25:1	10	1	+10 to +40	2.50x2.50x0.75
1.7-2.0	T2YG1	SMA	20	0.40	1.25:1	10	1	0 to +55	1.00x1.00x0.50
1.7-2.3	T1XD2	SMA	20	0.40	1.25:1	10	1	0 to +50	1.50x1.75x0.75
1.9-2.1	T1ZT1	SMA	18	0.30	1.30:1	16	1	0 to +50	1.00x1.00x0.50
2.0-2.3	T2YG2	SMA	22	0.30	1.20:1	10	1	0 to +55	1.00x1.00x0.54
2.0-4.0	T2XP1	SMA	20	0.40	1.25:1	10	1	0 to +50	1.63x1.63x0.75
2.0-5.5	T2XD1	SMA	12	1.25	1.50:1	10	1	+20 to +60	2.00x1.86x0.55
2.0-7.0	E2XB1**	SMA	12	1.50	1.35:1	10	10	+10 to +40	3.20x1.75x0.63
2.0-8.0	T2XC2	SMA	10	1.30	2.00:1	10	1	0 to +60	2.00x1.85x0.55
2.0-8.0	E2XB2	SMA	20[1]	1.1[1]	1.35:1	10	10	-20 to +70	3.20x1.75x0.63
2.0-10.0	E2XA1**	SMA	20[1]	2.00	1.35:1	10	10	+10 to +40	3.20x1.75x0.63
2.3-2.7	T2YG3	SMA	20	0.40	1.20:1	10	1	0 to +55	1.00x1.00x0.54
2.5-3.5	T2YD1	SMA	20	0.50	1.25:1	10	10	-20 to +55	1.63x1.63x0.75
2.9-3.2	T2XQ1	SMA	18	0.60	1.30:1	10	1	-40 to +80	0.75x0.75x0.50
3.4-4.2	T3ZF1	SMA	22	0.30	1.20:1	20	1	-30 to +65	1.00x1.00x0.50
3.4-4.2	T3XD1	SMA	18	0.40	1.30:1	10	1	0 to +50	1.00x1.13x0.75
3.5-7.0	T3XF1*	SMA	40	0.80	1.25:1	10	1	0 to +50	2.00x1.10x0.63
3.7-4.2	T3XB1	SMA	20	0.30	1.30:1	10	1	-40 to +60	1.00x1.00x0.56
4.0-8.0	T4XJ1	SMA	20	0.40	1.25:1	1	1	0 to +50	1.00x1.10x0.63
4.0-9.0	T4XA1	SMA	35	1.10	1.35:1	10	1	0 to +50	2.00x1.10x0.63
4.0-18.0	E4XB1**	SMA	15	1.50	1.50:1	10	10	-54 to +85	2.60x1.00x0.56
4.4-5.0	T4XC1	SMA	23	0.30	1.20:1	10	1	-54 to +85	1.00x1.00x0.56
5.4-5.9	T5XM4	SMA	20	0.30	1.20:1	10	1	0 to +50	0.50x0.60x0.50
5.7-5.85	T5YG1	SMA	20	0.40	1.50:1	10	2	-20 to +70	0.60x0.60x0.50
5.9-6.45	T5YB1	SMA	24	0.40	1.15:1	10	1	0 to +70	0.51x0.68x0.56
5.9-12.4	T5XF1	SMA	17	0.60	1.35:1	10	1	0 to +70	0.63x0.80x0.80
6.0-18.0	T6XD3	SMA	13	1.10	1.60:1	10	1	-54 to +85	0.65x0.58x0.38
7.0-12.4	T7XA3	SMA	20	0.40	1.25:1	10	1	0 to +50	0.85x1.00x0.63
7.25-7.75	T7XK6	SMA	20	0.40	1.20:1	10	1	0 to +65	0.51x0.68x0.56
7.5-18.0	T7XB1	SMA	15	1.00	1.45:1	10	1	-20 to +85	0.51x0.68x0.56
7.6-8.6	T7XG1	SMA	24	0.40	1.15:1	10	1	0 to +65	0.60x0.75x0.50
8.0-12.0	T8XF2	SMA	20	0.40	1.25:1	10	1	-20 to +65	0.86x1.10x0.63
8.0-18.0	T8XM1	SMA	15	0.80	1.45:1	10	1	0 to +70	0.51x0.68x0.56
8.0-20.0	T8XA2	SMA	15	1.00	1.45:1	10	1	0 to +70	0.51x0.68x0.56
10.0-14.0	T10C1	SMA	25	0.50	1.15:1	10	1	0 to +70	0.51x0.68x0.56
12.0-18.0	T12D1*	SMA	35	1.20	1.35:1	10	1	-20 to +65	1.25x0.80x0.50
14.0-14.5	T14G2	SMA	20	0.30	1.15:1	10	1	0 to +50	0.50x0.60x0.50
14.0-16.0	T14A1	SMA	20	0.40	1.20:1	10	1	-54 to +85	0.51x0.68x0.56
17.0-18.0	T17B1	SMA	20	0.50	1.25:1	10	1	0 to +50	0.51x0.68x0.56
18.0-21.0	T18B1	SMA	20	0.50	1.25:1	10	1	0 to +50	0.51x0.68x0.56
20.0-24.0	T20C1	SMA	23	0.50	1.25:1	10	1	-54 to +85	0.38x0.50x0.38
22.0-26.0	T22A1	SMA	25	0.50	1.15:1	10	1	0 to +50	0.51x0.68x0.56

1 20 dB from 2-8 GHz and 13dB from 8-10GHz. †Power rating of termination for isolators, Circulators rated higher. * Dual Junction Isolator ** Edge Guided Isolator

Note: Most units are available as circulators. Consult factory. 2. Isolation 15db between 6.0 an 8.0 GHz, loss 1.5db between 2.0 and 2.2 GHz.

SINGLE JUNCTION ISOLATOR OR CIRCULATOR

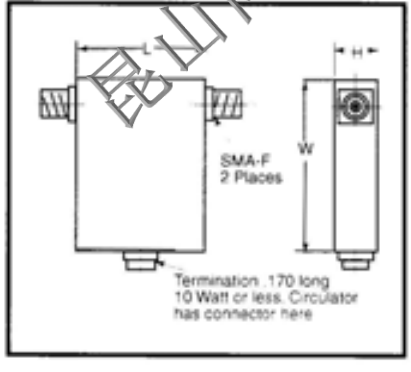

DUAL JUNCTION ISOLATOR
OR EDGE GUIDED ISOLATOR

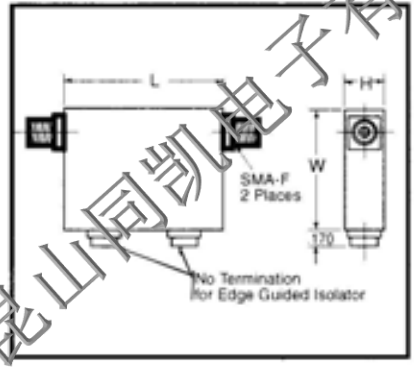

昆山同凯电子有限公司

SONOMA SCIENTIFIC, INC.

MICROSTRIP COMPATIBLE ISOLATORS & CIRCULATORS

HIGH POWER
LOW INSERTION LOSS
LOW VSWR
SMALL SIZE
THICK FILM SILVER

FREQUENCY (GHz)	MODEL NUMBER	MINIMUM ISOLATION (DB)	MAXIMUM INSERTION LOSS (DB)	MAXIMUM VSWR	RATED POWER (WATTS)	OPERATING TEMPERATURE RANGE (°C)	SIZE LXWXH (IN.)
4.4-5.0	T4XK1	18	0.4	1.30	30	-40 TO +85	.50x.95x.24
4.4-5.0	C4XS1	20	0.35	1.25	50	-20 TO +75	.50x.71x.20
5.25-6.00	T5XN9	20	0.4	1.25	30	-20 TO +55	.50x.95x.24
5.90-6.40	T5XN5	20	0.4	1.25	20	0 TO +70	.50x.95x.24
5.90-6.45	T5XN4	20	0.4	1.25	35	0 TO +50	.50x.95x.24
5.90-6.45	T5XN11	20	0.4	1.25	10	-20 TO +75	.50x.95x.24
6.4-7.2	T6XB3	17	0.4	1.25	15	-20 TO +70	.35x.60x.20
10.0-10.5	T10X1	15	0.5	1.30	10	-50 TO +85	.35x.60x.25

1. *Tin-lead solder with 2% silver is suggested for soldering.*
2. *Average rated power shown is the rating of the standard isolator termination.*
3. *Higher power is available on special order.*

昆山同凯电子有限公司

2236 Suite A Park Place, Minden, NV 89423 Phone: 775-783-9100 Fax: 775-783-9098
E-mail: circulators@sonomascientific.com Website: www.sonomascientific.com